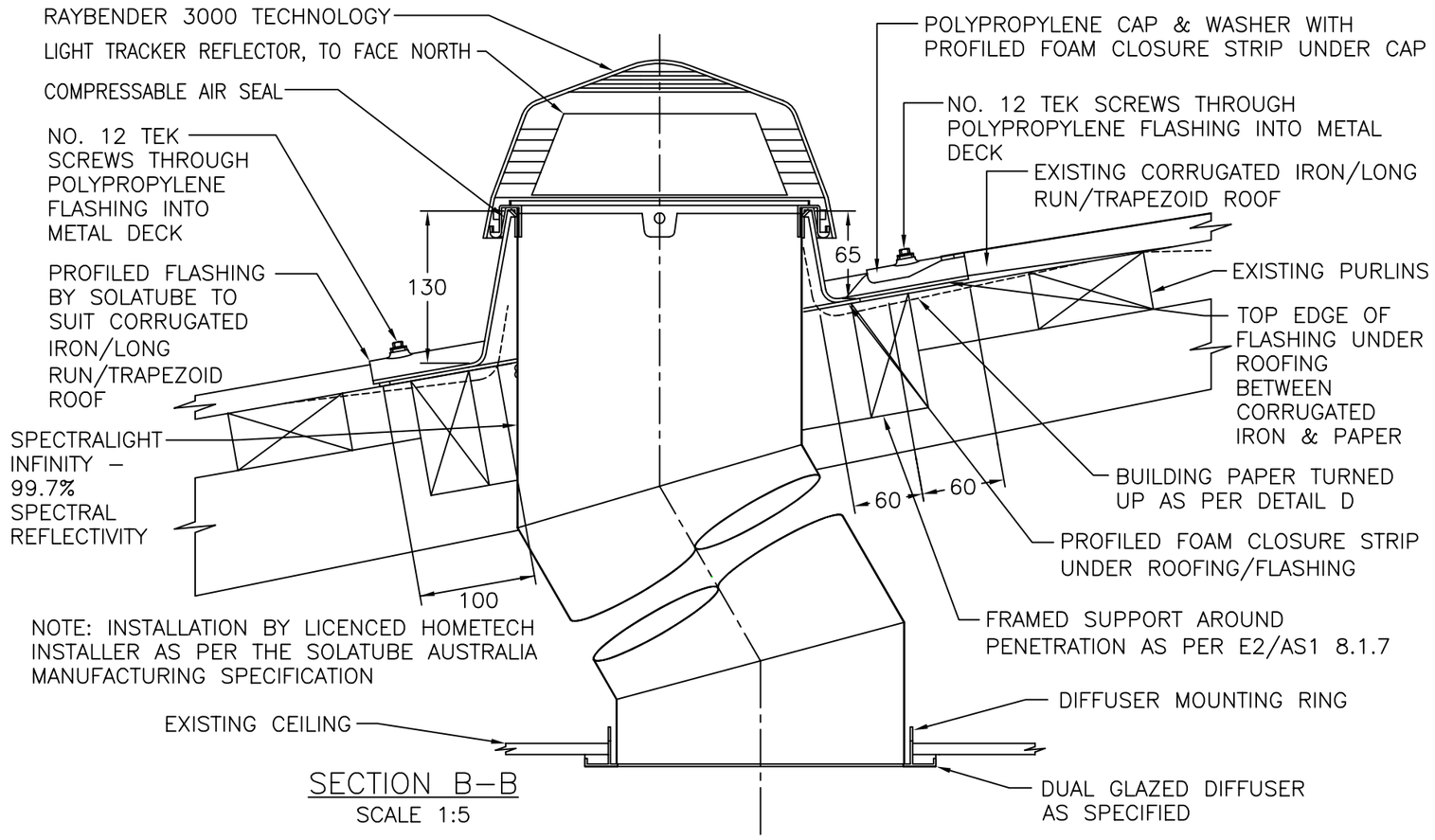

SECTION B–B
SCALE 1:5

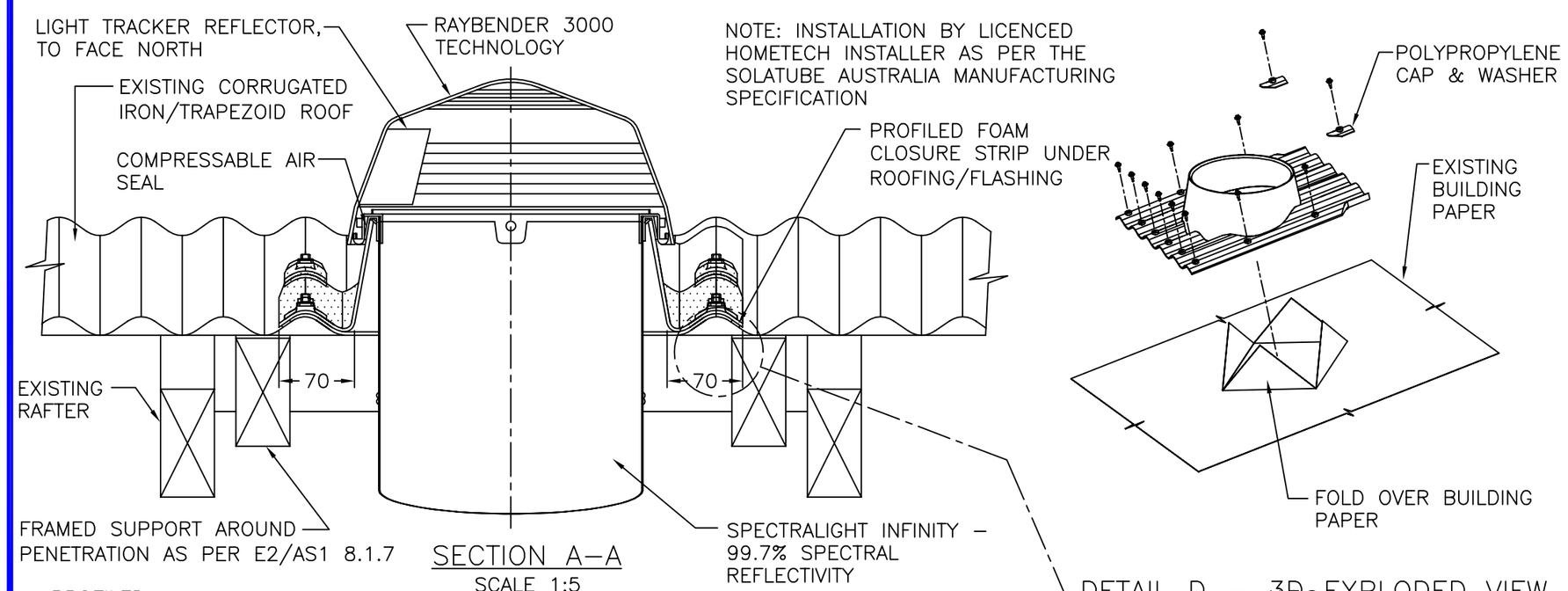

SECTION A–A
SCALE 1:5

DETAIL D – 3D EXPLODED VIEW
N.T.S.

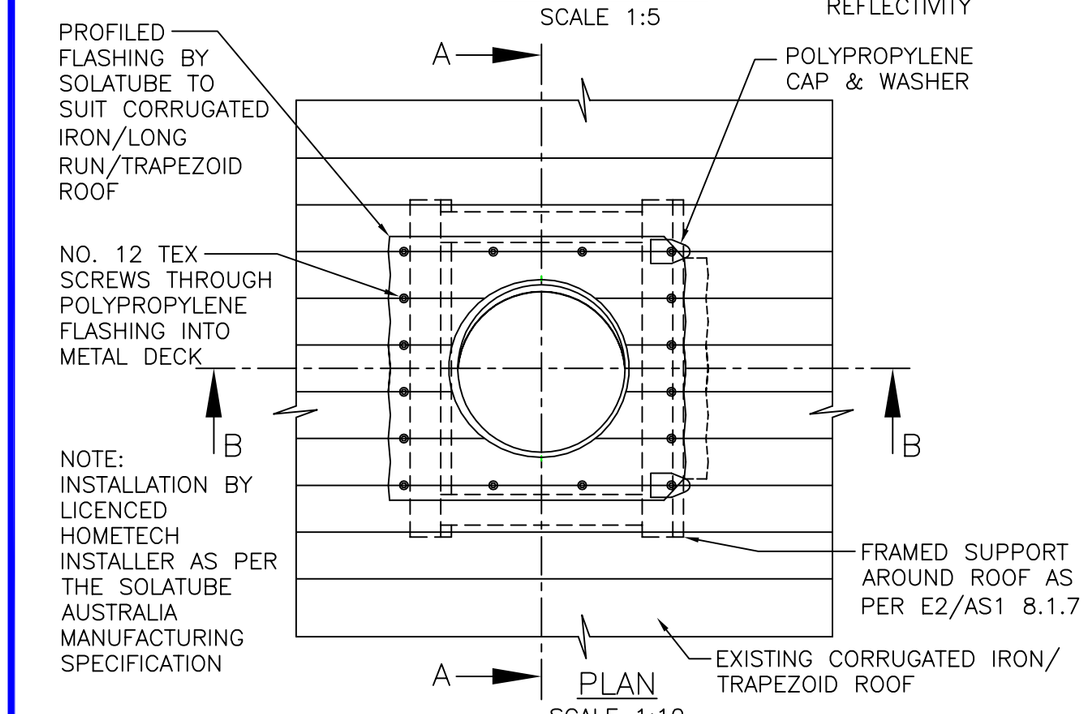

PLAN
SCALE 1:10

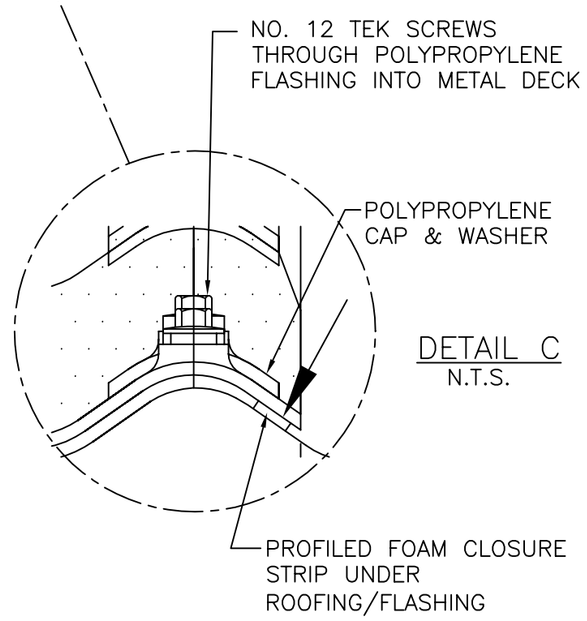

DETAIL C
N.T.S.

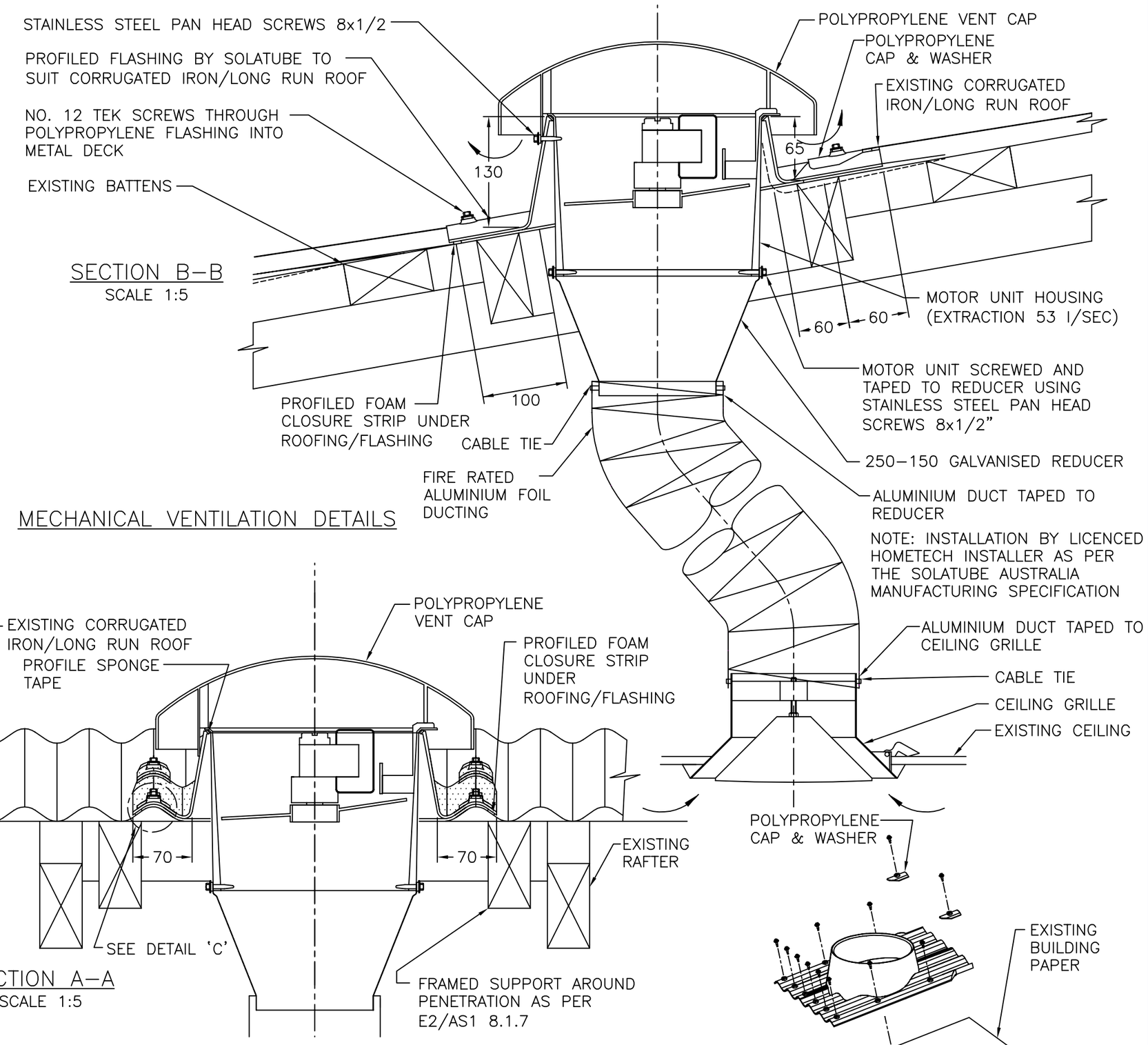

SECTION B–B
SCALE 1:5

MECHANICAL VENTILATION DETAILS

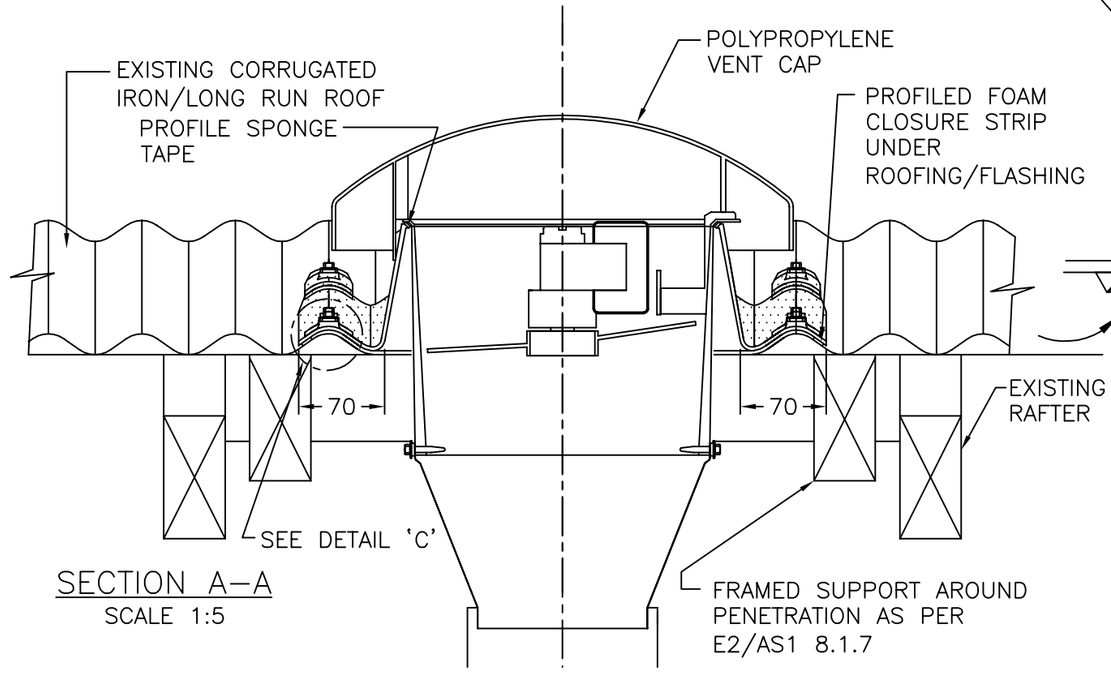

SECTION A–A
SCALE 1:5

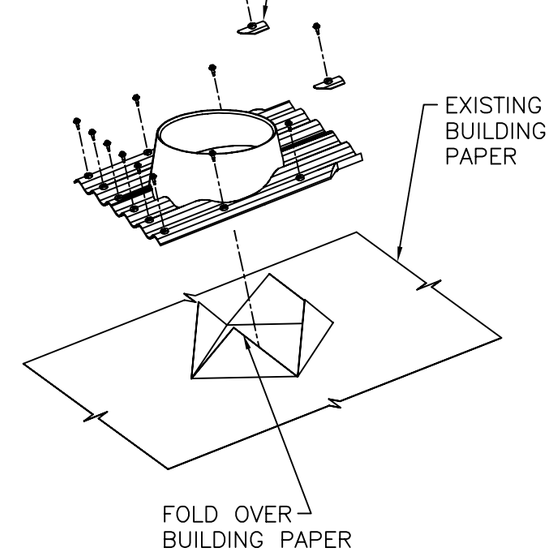

DETAIL D – 3D EXPLODED VIEW
N.T.S.

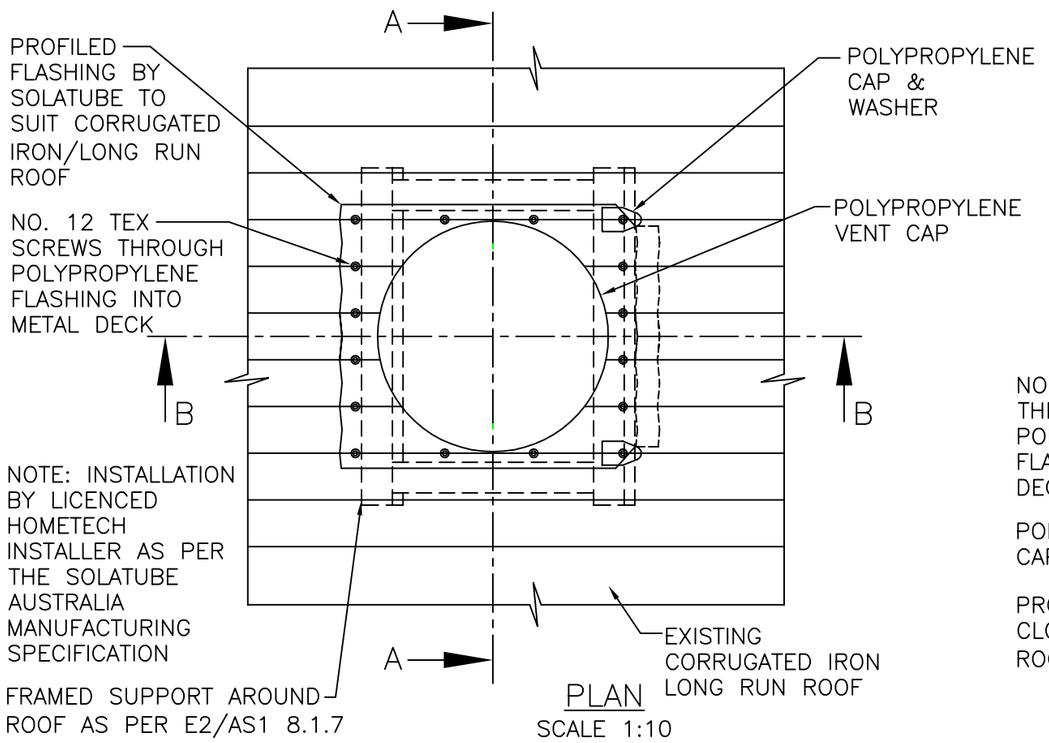

PLAN
SCALE 1:10

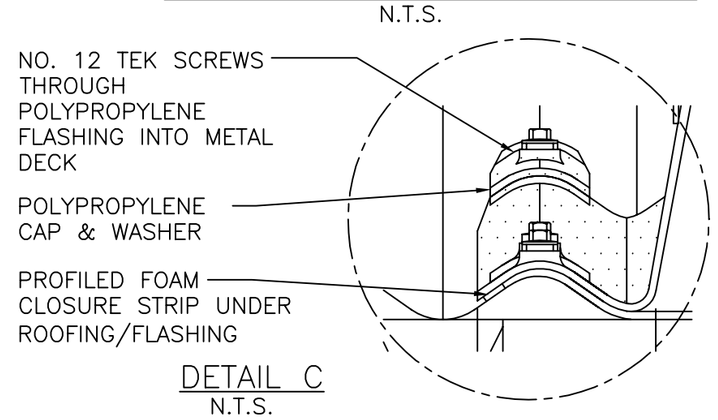

DETAIL C
N.T.S.

HOMETECH
HEALTHY HOME SOLUTIONS
PHONE: 0800 466–383
WEB: www.solatube.co.nz

SOLATUBE
Innovation in Daylighting™
BRANZ Appraised
Appraisal No.865 [2009]

Copyright
Trademarks and Patents registered,
Authorised Distributor
HomeTech Limited: New Zealand.

SOLATUBE 160DS (250MM) TUBULAR DAYLIGHTING DEVICE (TDD) MECHANICAL VENTILATION COMBINATION INSTALLATION FOR CORRUGATED IRON/TRAPEZOID/LONG RUN ROOF

INSTALLATION: INSTALLED BY A LICENCED HOMETECH INSTALLER AS PER THE SOLATUBE AUSTRALIA MANUFACTURING SPECIFICATION

© 2005 HomeTech Ltd

DRAWN	PCR	REVISION	A
DATE	20/10/09	SCALE	1:5,1:10,NTS
APPROVED	PN	DWG NO.	160DS–VC–C
DATE	21/10/09		